# Číslo typu DCM501  CORDLESS COFFEE MAKER

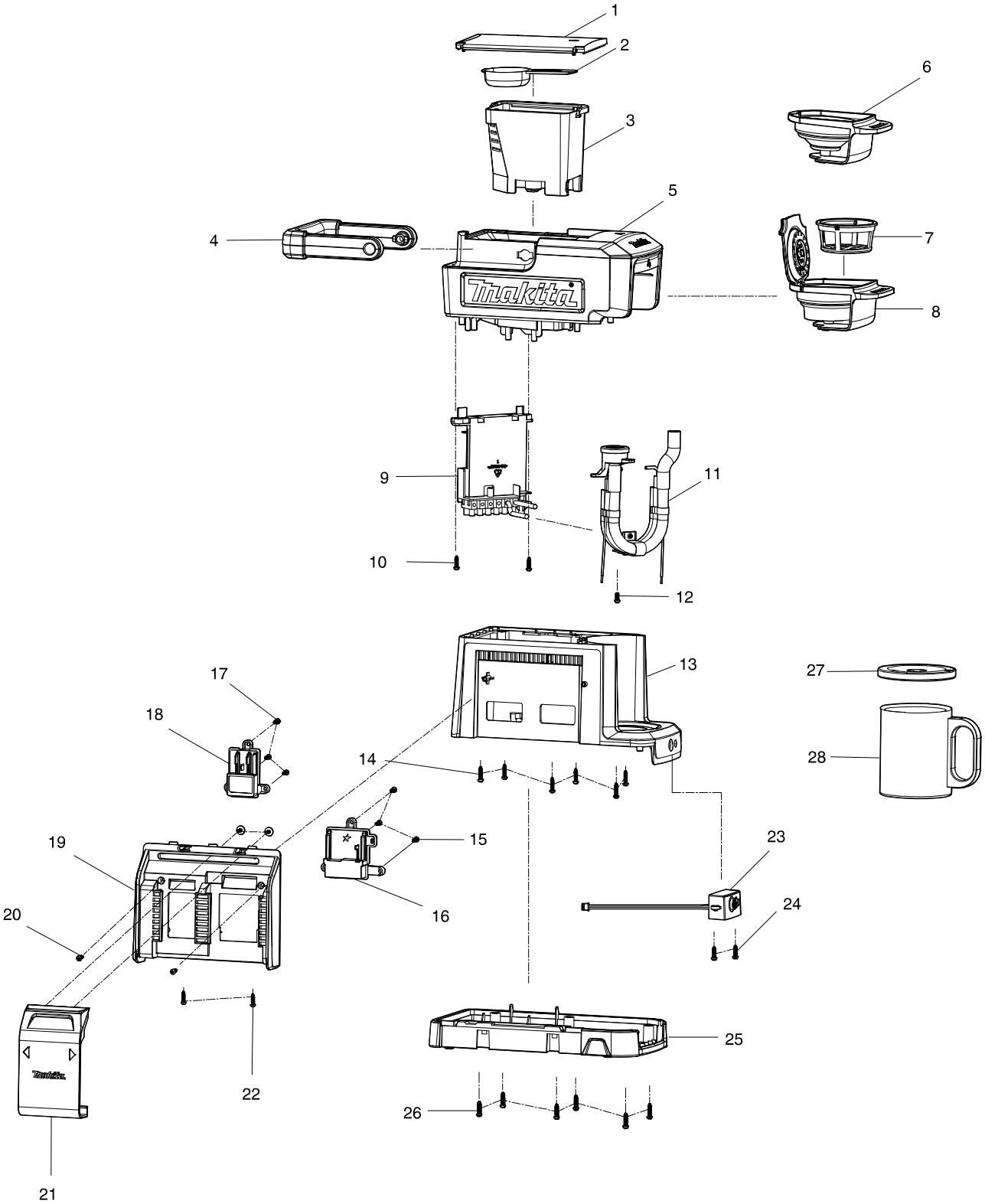

# Číslo typu DCM501 CORDLESS COFFEE MAKER



| Položka | Číslo dílu | Popis | Změn | Množst | N/O | Možnost 1 | Možnost 2 | Poznámka |
|---|---|---|---|---|---|---|---|---|
| 001 | KF00000034 | WATER TANK COVER | | 1 | | | | |
| 002 | KF00000033 | SPOON | | 1 | | | | |
| 003 | KF00000019 | WATER TANK SET | | 1 | * | | | |
| 003-1 | KF00000053 | WATER TANK SET | O | 1 | | | | |
| 004 | KF00000017 | HANDLE SET(BLUE) | | 1 | | | | |
| 005 | KF00000010 | TOP&MIDDLE COVER SET(BLUE) | | 1 | * | | | |
| 005-1 | KF00000042 | TOP&MIDDLE COVER SET(BLUE) | O | 1 | | | | |
| 006 | KF00000014 | POD DRAWER | | 1 | * | | | |
| 006-1 | KF00000045 | POD DRAWER | O | 1 | | | | |
| 007 | KF00000013 | FILTER SET | | 1 | | | | |
| 008 | KF00000012 | DRAWER SET | | 1 | * | | | |
| 008-1 | KF00000044 | DRAWER SET | O | 1 | | | | |
| 009 | KF00000008 | MAIN PCB SET | | 1 | | | | |
| 010 | KF00000002 | SCREW 3X12 | | 2 | | | | |
| 011 | KF00000009 | HEATING TUBE SET | | 1 | | | | |
| 012 | KF00000002 | SCREW 3X12 | | 1 | | | | |
| 013 | KF00000003 | MAIN BODY (BLUE) | | 1 | | | | |
| 014 | KF00000002 | SCREW 3X12 | | 6 | | | | |
| 015 | KF00000002 | SCREW 3X12 | | 3 | | | | |
| 016 | KF00000032 | UNIVERSAL BATTERY HOLDER SET | | 1 | | | | |
| 017 | KF00000002 | SCREW 3X12 | | 3 | | | | |
| 018 | KF00000031 | 10.8V BATTERY HOLDER SET | | 1 | | | | |
| 019 | KF00000029 | BATTERY BOX (BLUE) | | 1 | | | | |
| 020 | KF00000007 | SCREW 3X10 | | 2 | | | | |
| 021 | KF00000006 | SLIDING COVER OF BATTERY SET | | 1 | | | | |
| 022 | KF00000002 | SCREW 3X12 | | 2 | | | | |
| 023 | KF00000005 | BUTTON PCB ASSEMBLY | | 1 | | | | |
| 024 | KF00000002 | SCREW 3X12 | | 2 | | | | |
| 025 | KF00000001 | BASE SET | | 1 | | | | |
| C10 | KF00000028 | FOOT | | 4 | | | | |
| 026 | KF00000002 | SCREW 3X12 | | 6 | | | | |
| 027 | KF00000021 | CUP COVER | | 1 | | | | |
| 028 | KF00000020 | CUP + SILK SCREEN | | 1 | | | | |

Prosím objednávejte díly s jejich objednacími čísly.

vytisknout datum 15/10/2018